JIANGSU CHANGJING ELECTRONICS TECHNOLOGY CO., LTD.

TO-220-3L/TO-220F Plastic-Encapsulate Diode

SBD10100CT、SBDF10100CT SCHOTTKY BARRIER RECTIFIER

MAIN CHARACTERISTICS

I_O	10（2×5）A
V_{RRM}	100 V
T_j	150 ℃
$V_{F(typ)}$	0.63V （@Tj=125℃）

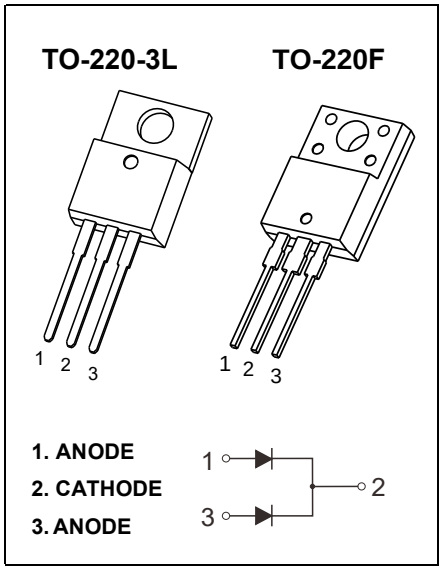

FEATURES

- Low Power Loss,High Efficiency
- Guard Ring Die Construction for Transient Protection
- High Current Capability and Low Forward Voltage Drop

MARKING

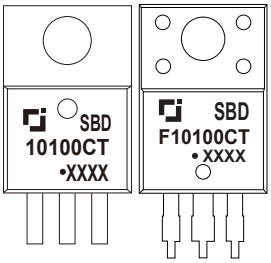

SBD(F)10100CT = Device code
Solid dot = Green molding compound device
if none, the normal device
XXXX = Code

MAXIMUM RATINGS (T_a=25℃ unless otherwise noted)

Symbol	Parameter	SBD 10100CT	SBD F10100CT	Unit
V_{RRM}	Peak repetitive reverse voltage	100		V
V_{RWM}	Working peak reverse voltage			
V_R	DC blocking voltage			
$V_{R(RMS)}$	RMS reverse voltage	70		V
I_O	Average rectified output current	10		A
I_{FSM}	Non-Repetitive peak forward surge current (8.3ms half sine wave)	120		A
$R_{\Theta Jc}$	Thermal resistance from junction to case ,Tc=25℃	2.0	3.0	℃/W
$R_{\Theta JA}$	Thermal resistance from junction to ambient	62.5		℃/W
T_j	Junction temperature	150		℃
T_{stg}	Storage temperature	-55~+150		℃

ELECTRICAL CHARACTERISTICS (T_a=25℃ unless otherwise specified)

Parameter	Symbol	Test conditions		Min	Typ	Max	Unit
Reverse voltage	$V_{(BR)}$	I_R=0.1mA		100			V
Reverse current	I_R	V_R=100V	Tj =25℃		2.0	100	uA
			Tj =125℃		2.0		mA
Forward voltage	V_F	I_F=3A	Tj =25℃		0.71		V
			Tj =125℃		0.57		V
		I_F=5A	Tj =25℃		0.77	0.85	V
			Tj =125℃		0.63		V

*Pulse test: pulse width ≤300μs, duty cycle≤ 2.0%.

Typical Characteristics

FIG.1: FORWARD CURRENT DERATING CURVE

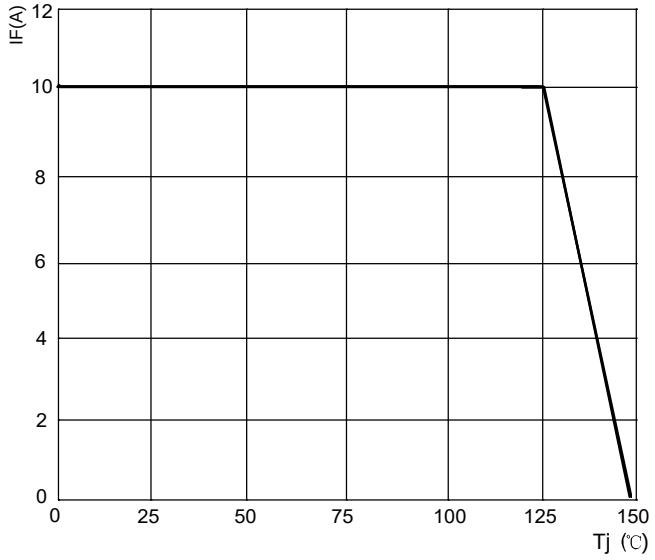

FIG.2: TYPICAL FORWARD CHARACTERISTICS

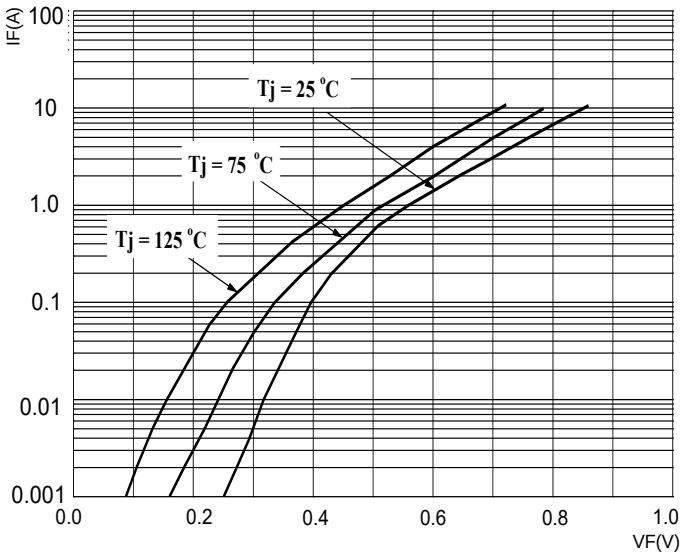

FIG.3: TOTAL CAPACITANCE DERATING CURVE

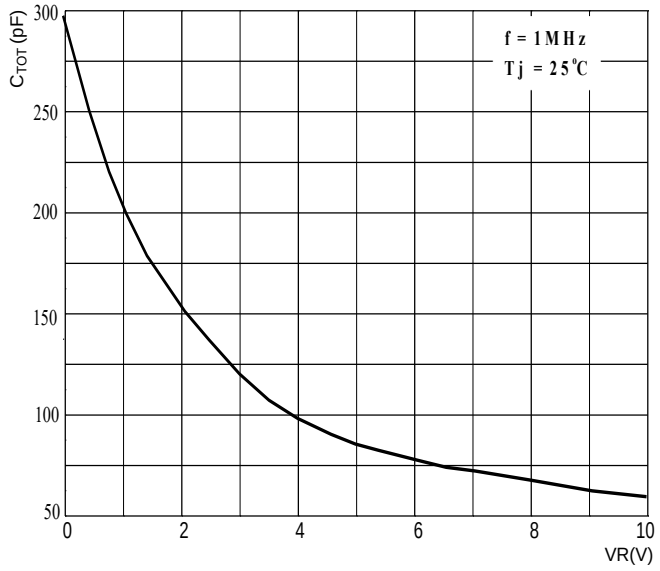

FIG.4: TYPICAL REVERSE CHARACTERISTICS

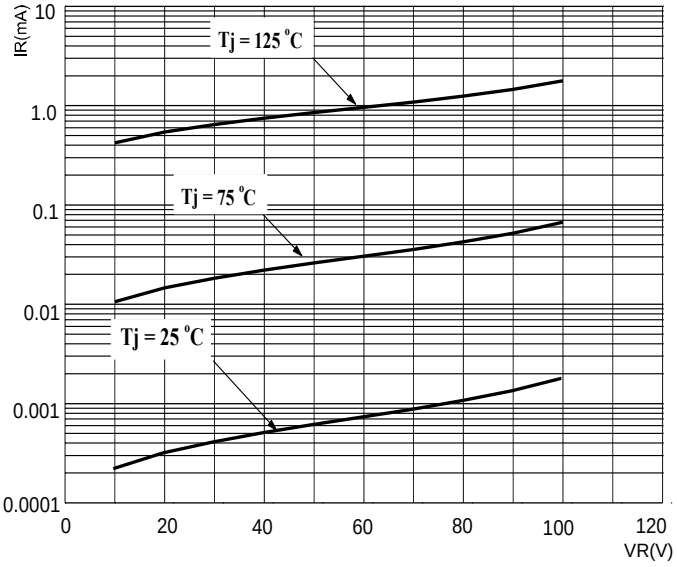

TO-220-3L Package Outline Dimensions

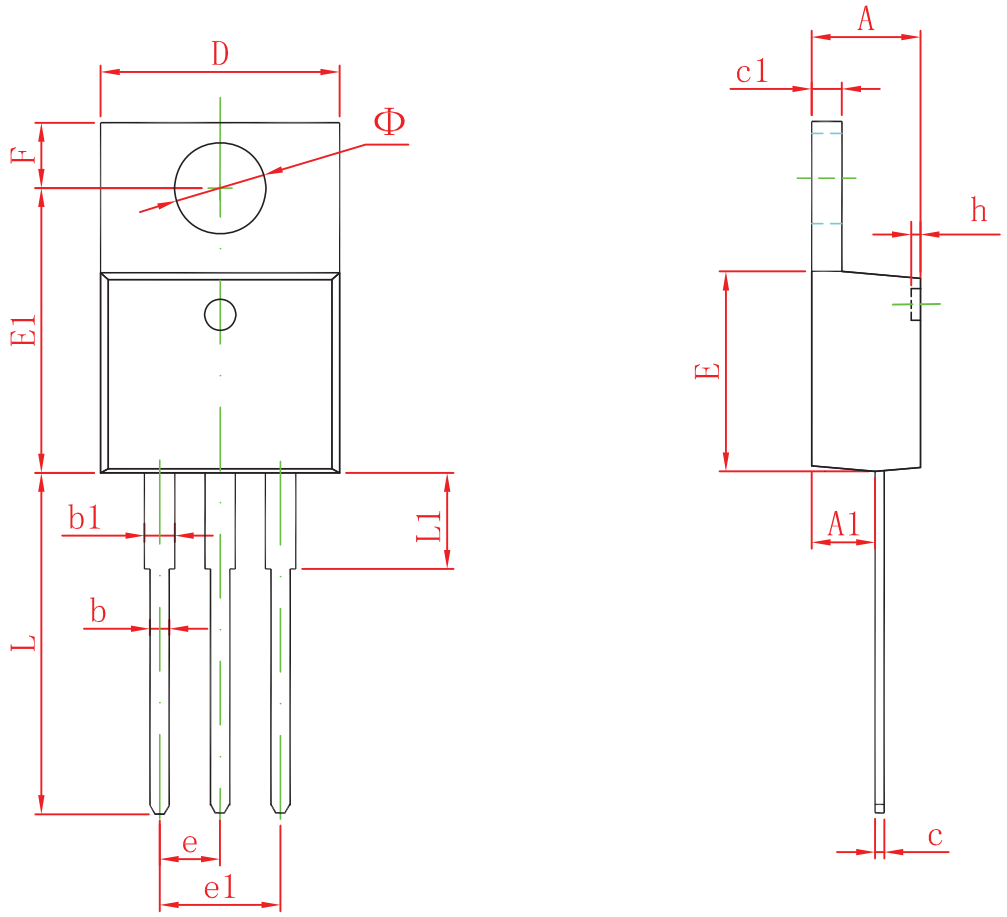

Symbol	Dimensions In Millimeters		Dimensions In Inches	
	Min	Max	Min	Max
A	4.450	4.750	0.175	0.187
A1	2.520	2.820	0.099	0.111
b	0.710	0.910	0.028	0.036
b1	1.170	1.370	0.046	0.054
c	0.300	0.500	0.012	0.020
c1	1.170	1.370	0.046	0.054
D	9.830	10.330	0.387	0.407
E	8.500	8.900	0.335	0.350
E1	12.050	12.650	0.474	0.498
e	2.540 TYP		0.100 TYP	
e1	4.900	5.200	0.192	0.205
F	2.540	2.940	0.100	0.116
h	0.100 TYP		0.004 TYP	
L	13.300	13.800	0.523	0.543
L1	3.540	3.940	0.139	0.155
Φ	3.735	3.935	0.147	0.155

TO-220F Package Outline Dimensions

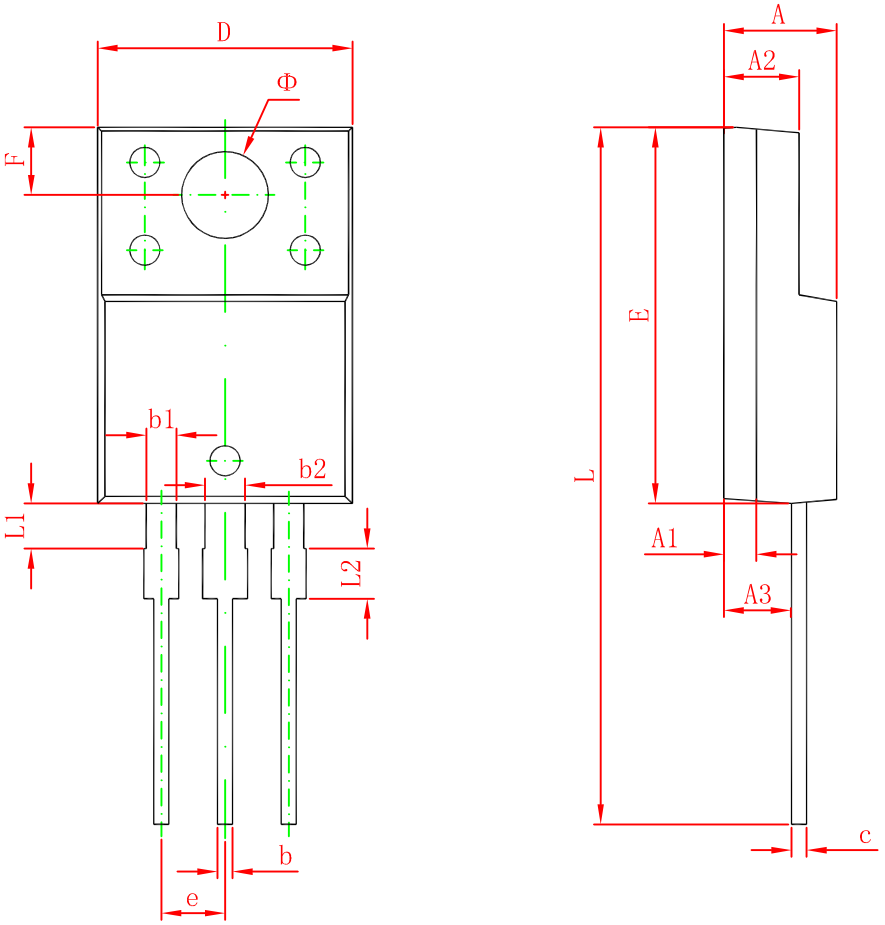

Symbol	Dimensions In Millimeters		Dimensions In Inches	
	Min.	Max.	Min.	Max.
A	4.300	4.700	0.169	0.185
A1	1.300 REF.		0.051 REF.	
A2	2.800	3.200	0.110	0.126
A3	2.500	2.900	0.098	0.114
b	0.500	0.750	0.020	0.030
b1	1.100	1.350	0.043	0.053
b2	1.500	1.750	0.059	0.069
c	0.500	0.750	0.020	0.030
D	9.960	10.360	0.392	0.408
E	14.800	15.200	0.583	0.598
e	2.540 TYP.		0.100 TYP.	
F	2.700 REF.		0.106 REF.	
Φ	3.300	3.700	0.130	0.146
L	28.000	28.400	1.102	1.118
L1	1.700	1.900	0.067	0.075
L2	0.900	1.100	0.035	0.043